This is a Controlled Document that complies with Wesfarmers Chemicals, Energy & Fertilisers formatting and Quality Control standards. Please check that this is the latest available version before use.	
Title:	**EQUIPMENT NUMBERING SYSTEM**
Number:	**ES-14-101-06**
Version Number:	**17.0**
Date Revised:	**16 January 2013**
Owner:	**Barry O'Neill**
Authoriser:	**Manoj Thakur**
Reasons for Creating or Amending Document	**New Owner** **Full Review of Document**
Actual Change Details:	**Control Block updated only**

TABLE OF CONTENTS

1. SCOPE 3

2. PURPOSE 3

3. REFERENCES 3

4. DEFINITIONS 3

4.1 PARENT EQUIPMENT 3
4.2 ASSOCIATED EQUIPMENT 3
4.3 EQUIPMENT DESCRIPTION CONVENTION 4
4.4 'ELECTRICAL ONLY' EQUIPMENT 4
4.5 ELECTRICALLY DRIVEN/SUPPLIED MECHANICAL EQUIPMENT 4

5. GENERAL 5

5.1 PLANTS - DESIGNED POST MAY 1998 5
5.2 PLANTS DESIGNED PRE MAY 1998 5

6. EQUIPMENT NUMBERING 6

6.1 LOCATION CODE 7
6.2 PLANT AREA CODE 7
6.3 EQUIPMENT TYPE CODE 7
6.4 SEQUENCE NUMBER 8
6.5 SEQUENCE NUMBER ALPHA SUFFIX 8

APPENDIX 1 - LOCATION CODES **9**

APPENDIX 2 - PLANT AREA CODES **10**

APPENDIX 3 - MECHANICAL EQUIPMENT / P&ID NUMBER LINK **13**

APPENDIX 4 ..... **15**

MECHANICAL EQUIPMENT - SHEET 1 OF 2 15
MECHANICAL EQUIPMENT - SHEET 2 OF 2 16

APPENDIX 5 ..... **17**

ELECTRICAL EQUIPMENT - SHEET 1 OF 3 17
ELECTRICAL EQUIPMENT - SHEET 2 OF 3 18
ELECTRICAL EQUIPMENT - SHEET 3 OF 3 19

APPENDIX 6 - INSTRUMENT EQUIPMENT **20**

APPENDIX 7 - COMMUNICATION, FIRE PROTECTION SECURITY SYSTEM & TEST / CALIBRATION EQUIPMENT **21**

APPENDIX 8 - ISA EQUIPMENT CODES **22**

ISA EQUIPMENT CODES – PREFIX ‘A’ AND ‘B’ 23
ISA EQUIPMENT CODES – PREFIX ‘D’ AND ‘E’ 24
ISA EQUIPMENT CODES – PREFIX ‘F’ 25
ISA EQUIPMENT CODES – PREFIX ‘H’, ‘I’ AND ‘J’ 26
ISA EQUIPMENT CODES – PREFIX ‘L’, ‘P’ AND ‘S’ 27
ISA EQUIPMENT CODES – PREFIX ‘T’ AND ‘U’ 29
ISA EQUIPMENT CODES – PREFIX ‘V’, ‘W’, ‘X’ AND ‘Y’ 30
ISA EQUIPMENT CODES – PREFIX ‘Z’ 31

APPENDIX 9 - PHILOSOPHY BEHIND THE EQUIPMENT NUMBERING SYSTEM: FOR PLANTS DESIGNED POST MAY 1998 ..... **32**

APPENDIX 10 - VARIATIONS TO STANDARD **36**

TABLES

Table 1 - Equipment Type Code Allocation 7

Table 2 - Equipment Sequence Number Allocation 8

1. SCOPE

This Standard specifies the method by which all equipment shall be allocated identification numbers.

2. PURPOSE

To ensure a uniform method of equipment numbering is adopted throughout all Wesfarmers CSBP Limited facilities, and that there is a direct and identifiable link to associated drawings for plants designed post May 1998.

3. REFERENCES

ES-14-101-02 Drawing Management
ES-14-101-03 Drawing Preparation
ES-14-101-04 Drawing Numbering
ES-14-102-09 Labels and Signs: Plant and Equipment
ES-14-601-01 Basis for Design - Piping
ES-14-603-02 Valve Specifications for Process Isolation
ES-14-902-01 Materials & Workmanship for Electrical Installations

4. DEFINITIONS

4.1 PARENT EQUIPMENT

A stand-alone unit of equipment that is capable of independent operation.

e.g. Conveyor, fan, pump, Instrument Loop.

4.2 ASSOCIATED EQUIPMENT

Item of equipment that is a component of a Parent unit of equipment, for example:

Mechanical - Gearbox (G)

- Internal Combustion Engine (M)

Electrical - Motor (M)

- Variable Speed Drive (VSD)

- Electrical Heater (EH)

Note: Electrical Heater can also be classified as a parent item of equipment in certain situations.

Instrument - Loop elements as listed in Appendix 8.

4.3 EQUIPMENT DESCRIPTION CONVENTION

Equipment description convention, to be used for equipment lists, data sheets etc to be as per the following examples.

a. General Equipment

Equipment type followed by duty as per examples:

1124D0101	Drum Dryer
1124GD0101	Gearbox Drum Dryer
1124MD0101	Motor Drum Dryer
1166P1407A	Pump Slurry Duty Train 1
1166P1407B	Pump Slurry Standby Train 1
1166P2407A	Pump Slurry Duty Train 2
1166P2407B	Pump Slurry Standby Train 2

Instrument Loop and Associated Components

Instrument Loop process followed by medium and duty as per example:

1124I0208	Temperature Inlet Air Drum Dryer
1124TIT0208	Temperature Inlet Air Drum Dryer
1124TE0208	Temperature Inlet Air Drum Dryer
1124TIC0208	Temperature Inlet Air Drum Dryer
1124TV0208	Temperature Inlet Air Drum Dryer

4.4 'ELECTRICAL ONLY' EQUIPMENT

Electrical equipment, which is not considered to be an integral part of some mechanical equipment. Associated discipline drawings are assigned a sequence number that matches/relates to the electrical equipment number.

4.5 ELECTRICALLY DRIVEN/SUPPLIED MECHANICAL EQUIPMENT

Mechanical equipment that is either supplied by an electrical feeder or is driven by an electrical device. Associated discipline drawings are assigned a sequence number that matches/relates to the mechanical equipment number.

5. GENERAL

5.1 PLANTS - DESIGNED POST MAY 1998

At the preliminary P&ID development stage and prior to allocation of any equipment numbers, the responsible Project Engineering Group shall review project requirements against this standard with the Reliability Support Group.

Within agreed equipment ranges, numbers will be assigned by the responsible Project Engineering Group and approved by the Reliability Support Group prior to Detail Design Stage.

Note: No deviation from this standard is permitted without consultation with the Reliability Support Group and CSBP Project Engineering Document Control, and written consent of the Engineering Manager.

Approved variations to standard equipment numbering ranges shall be recorded in Appendix 10 of this standard, against the affected plant location/area codes.

For an explanation of the logic behind assigning equipment ranges as per this standard, refer to Appendix 9.

5.2 PLANTS DESIGNED PRE MAY 1998

Modifications to existing plants should adopt this numbering system where possible and practical.

Prior to project commencement, the Reliability Support Group shall in consultation with CSBP Project Engineering Document Control and the responsible Project Engineering Group, review the project scope and determine whether this standard can be used wholly or in part. Where it is agreed to be impractical to deviate, the plant's existing coding system will be followed.

Assignment of new equipment numbers in an existing plant is the responsibility of the Reliability Support Group.

6. EQUIPMENT NUMBERING

Standard format is as follows:

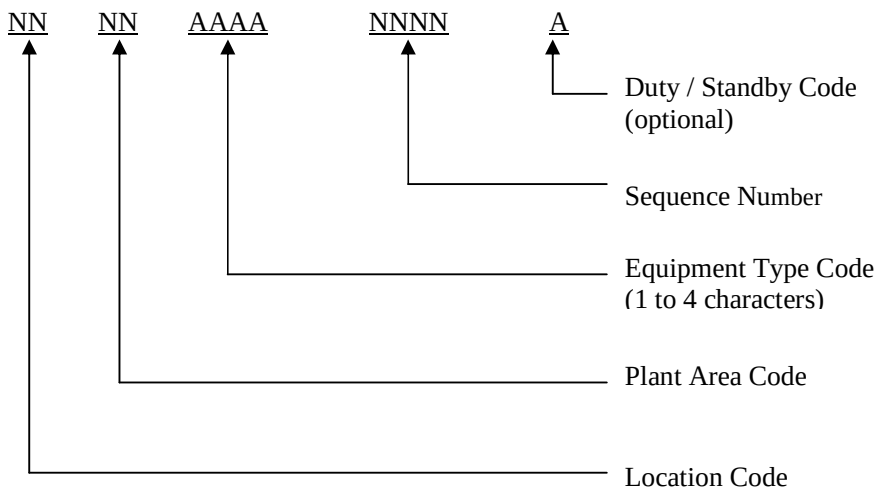

N - Numeric Character
A - Alpha Character

Note: Full equipment number shall be specified as a continuous string ie. no spaces, dashes, slashes or other similar characters. Leading zeros shall not be omitted.

Example: 1124GM0261A

Equipment numbers for motors, gearboxes and variable speed drives to be directly related to the associated mechanical piece of equipment.

Example:	1124D0101	Drum
	1124MD0101	Motor Drum
	1124GD0101	Gearbox Drum
	1124VSDD0101	Variable Speed Drive Drum

Where alpha suffixes are used in conjunction with variable speed drives (VSD's); the Parent Mechanical Equipment Code shall not be specified due to system limitation of twelve (12) characters.

Example:	1124M0261	
	1124MM0261A	1124MM0261B
	1124GM0261A	1124GM0261B
	1124VSD0261A	1124VSD0261B

6.1 LOCATION CODE

Two (2) numeric characters assigned to each Wesfarmers CSBP Ltd location in accordance with Appendix 1.

6.2 PLANT AREA CODE

Two (2) numeric characters assigned to each process plant area or works related service installation in accordance with Appendix 2.

6.3 EQUIPMENT TYPE CODE

Alpha code assigned to describe the equipment type. Requirements for additional codes shall be documented and approved by the Reliability Support Group and Engineering Manager prior to use.

Allocation of equipment codes to be in accordance with the appendices referenced in Table 1.

EQUIPMENT GROUP		REFERENCE
Mechanical Equipment	Manual Valves, Flow Safety Valve, Hydrostatic Relief Valve, Pressure Safety Valve & Safety Equipment.	Appendix 3
Other Mechanical Items		Appendix 4
Electrical Equipment		Appendix 5
Instrument Equipment		Appendix 6
Communication, Fire Protection & Security System Equipment		Appendix 7
Instrument Loop Element - ISA Equipment Codes		Appendix 8
Variations to this Standard for Plants designed post May 1998		Appendix 10

Table 1 - Equipment Type Code Allocation

6.4 SEQUENCE NUMBER

A four (4) digit unique number, within its equipment type, number range and specific CSBP location and plant area codes except where:

a. First digit is used to distinguish between identical units with same duty in different process trains. Refer to Appendix 4.

b. Sequence number alpha suffix codes are used to indicate duty/standby equipment or to distinguish between identical units with a shared duty. Refer to Appendix 4 Sheet 1 'Sequence Number Alpha Suffix' for examples.

c. The associated Equipment Type Code is designated for use as a prefix to Mechanical Equipment Type Codes. Refer Appendix 4 'Associated Equipment' table for example.

Allocation of sequence numbers to be in accordance with appendices referenced in the Table 2.

EQUIPMENT GROUP		REFERENCE
Mechanical Equipment	Manual Valves, Flow Safety Valve, Hydrostatic Relief Valve, Pressure Safety Valve & Safety Equipment.	Appendix 3
Other Mechanical items		Appendix 4
Electrical Equipment		Appendix 5
Instrument Equipment		Appendix 6
Communication, Fire Protection, Security System Equipment & Test/Calibration Equipment		Appendix 7
Variations to this Standard for Plants designed post May 1998		Appendix 10

Table 2 - Equipment Sequence Number Allocation

6.5 SEQUENCE NUMBER ALPHA SUFFIX

An alpha digit assigned to indicate duty/standby equipment or to distinguish between identical units with a shared duty. Refer to Appendices 4, 5 and 6 for further detailed information.

APPENDIX 1 - LOCATION CODES

10	-	Perth
11	-	Kwinana
12	-	Bayswater
13	-	Geraldton
14	-	Bunbury
15	-	Albany
16	-	Esperance
17	-	Bibra Lake
19	-	Mt Weld
21	-	Merredin Fertiliser Depot
22	-	Wagin Fertiliser Depot
23	-	Dalwallinu Fertiliser Depot
24	-	Goomalling Fertiliser Depot
25	-	Corrigin Fertiliser Depot
26	-	Tambellup Fertiliser Depot
27	-	Manjimup Fertiliser Depot
62	-	Cyanide Minesite Installations

APPENDIX 2 - PLANT AREA CODES

PLANT AREA CODE	PLANT CODE (JDE)	DESCRIPTION
00	GEN / WKS	Plant general infrastructure, and site wide common services (Power, Water Roads, Sewerage, Drainage, gas pipelines) which do not logically belong to a single area. In Chemicals North only, use 71 for shared equipment, facilities and services which are specific to Chemicals North but do not logically belong to a single plant in that area.
02	PAP	Do not use. Up to 2004, was used for the Phosphoric Acid Storage tanks and associated equipment. Many current and historic drawings and equipment numbers associated with these tanks still have 1102 numbers. Use code 46 for these tanks. Do not allocate any new 02 numbers.
03	TKF	Up to 2004, was used for the Phosphoric Acid Storage tanks and associated equipment. Many current and historic drawings and equipment numbers associated with these tanks still have 1103 numbers. Use code 46 for these tanks and any associated equipment in the same geographical area. Do not allocate any new 03 numbers without approval of Engineering Manager (may be considered where use of 46 is inappropriate).
07	RMR	Sulphuric Acid Receival - Country Works
08	LFP	Applies to the area at Kwinana which was previously the Phosphoric Acid Plant, west of the SMP west wall. Includes Liquid Fertiliser blending and manufacture facilities in this area, tanks on the north of this area. Extends west to road east of ex Phos acid tanks and south to lane north of rock shed. Use 25 for Liquid Fertiliser manufacture facilities in Granulating Plant. Do not use 08 for any new Liquid Fertiliser manufacture facilities in other areas.
09	RMR	Materials Receivals at Kwinana
11	RMR	Materials Receivals at Country Works and No.2 Receivals Bin and its associated equipment at Kwinana. Use 44 for DL11 and any associated despatching facilities from No2 Receivals Bin.
12	SAP	Sulphuric Acid receivable and storage at Kwinana including remaining equipment from Sulphuric Acid Plant (now demolished), Sulphuric Acid receivable pipework, 2 x 1000T Sulphuric Acid Storage Tanks, and the 4 tanks and equipment to the east of the 2 x 1000T Sulphuric Acid Storage Tanks (one currently used for FSA storage). Was previously used for the 10,000T and 5,000T Sulphuric Acid Storage Tanks, now used for Flexi N storage, which have been renumbered 1146. Use 46 for new equipment associated with these tanks. Many current and historic drawings and equipment numbers associated with these tanks still have 1112 numbers.

PLANT AREA CODE	PLANT CODE (JDE)	DESCRIPTION
13	ICA	Sulphuric Acid Port Facilities
14	RMR	No.3 Receivals Bin and its associated equipment at Kwinana.
21	SMP	Superphosphate Manufacture Plants all works.
24	GP2	No.2 Granulating Plant (never built but some drawings exist)
25	GP	No.1 Granulating Plant and Liquid Fertiliser Manufacture Plant in Granulating Plant building.
26	PP	No.1 Prilling Plant
27	PP2	No.2 Prilling Plant
35	-	Bagging All Products (all locations except Kwinana)
41	SDD, SD1, SD2, SD3	Superphosphate Storage and Despatch including DL2, DL3 and DL8
42	CF, CFD, CF1, CF2, CF3, DL4, DL5, DL7	Compound Fertiliser Storage and Despatch including CF1 and CF2 buildings and equipment, Urea receivable plant, DL4, DL5, and DL7.
43	DL9, BB	AN Bulk Despatch including DL9, equipment inside CF1 building and Bulka Bag Filling Machine
44	D&D, D11	Fertiliser Despatch - Country Works and No.2 Bin Direct Load No.11 Kwinana
46	LFP	Liquid Fertiliser storage and despatch facilities and equipment in the following areas only: 2 tanks ex Sulphuric Acid (10,000T and 5,000T), 3 tanks ex Phos Acid, No22 and No23 loading stations south of ex Phos Acid tanks.
48	ANS	Ammonium Nitrate Storage Area (new facilities proposed for Chemicals North)
50	AP2	No.2 Ammonia Plant
56	DWP	Demineralisation Water Treatment Plant
58	NA2	No.2 Nitric Acid Plant
59	AN2	No.2 Ammonium Nitrate Plant
61	NHS, NHT, ALF, NH3	Ammonia Receivals, Storage and Despatch (Chemicals North). Includes ammonia import/export pipeline to wharf, ammonia storage tanks, liquefaction area, ammonia transfer pumps, and ALF.
62	NAP	No.1 Nitric Acid Plant

PLANT AREA CODE	PLANT CODE (JDE)	DESCRIPTION
63	ANP	No.1 Ammonium Nitrate Plant
65	ACP	Do not use. Was allocated to Ammonium Chloride Plant (never built)
66	SCS	Sodium Cyanide Solids Plant
67	CAP	Chlor-Alkali Plant
68	SCP, NGT	No.1 Sodium Cyanide Plant and Natural Gas Purification Plant
69	LDP	Sodium Cyanide Lump Dissolving Plant
70	SC2	No.2 Sodium Cyanide Plant
71	-	Previously for No1 Ammonia Plant (now being demolished). Use 71 for shared equipment, facilities and services which are specific to Chemicals North but do not logically belong to a single plant in that area. Use 00 for services including scheme water, bore water reticulation and gas pipelines which originate outside Chemicals North.
72	-	Do not use. Previously used for original Nitric Acid Plant, now demolished
73	-	Do not use. Previously used for original Ammonium Nitrate Plant, now demolished
74	COP	Carbon Dioxide supply from Chemicals North
85	ICA	Industrial Chemicals Area (Chemicals East). Use only for facilities in and around HAP shed.
94	BLD, LAB	Administration and Service Buildings
95	ENV	Environmental monitoring, waste water treatment, collection and disposal, KWRP water, wetland
99	-	Do not use. (Was allocated to Central Control Room)

Note: Plant codes are mostly, but not always, the same as the Accounting Cost Code for the particular plant area. New plant codes shall only be used with the approval of the Engineering Manager who will agree any new plant code with the Senior Accountant before it is used.

Note: Do not use any of the above plant codes in any geographical area other than as detailed above without approval of Engineering Manager.

Note: Do not change any plant code number which has already been allocated to a drawing or equipment item without approval of the Engineering Manager. A full assessment of the consequences of the change must first be made.

APPENDIX 3 - MECHANICAL EQUIPMENT / P&ID NUMBER LINK

EQUIPMENT TYPE CODE		COMMENTS
CODE	DESCRIPTION	
W	Manual Operated Valve and Check Valves (Note 1, 2 & 3)	Unique number, irrespective of valve type prefix, commencing with last two- (2) digits of P& ID. Example: P&ID: 1124-7-9002 Valve No: 1124-VG-06-50-W0201 where VG-06 is valve type 50-size in mm W0201 - valve tag no.
FSV	Flow Safety Valve (Excess Flow Valve) (Note 1 & 3)	Unique number, commencing with last two- (2) digits of P&ID. Example: P&ID: 1124-7-9002 Valve No. 1124FSV0201
HRV	Hydrostatic Relief Valve (Note 1, 3 & 4)	Unique number, commencing with last two- (2) digits of P&ID. Example: P&ID: 1124-7-9002 Valve No. 1124HRV0201
PSV	Pressure Safety Valve (Note 1& 3)	Unique number, commencing with last two (2) digits of P&ID Example: P&ID: 1124-7-9002 Valve No. 1124PSV0201
RO	Restriction Orifice (Note 1, 3, 5)	Unique number, commencing with the last two (2) digits of P&ID Example: P&ID: 1124-7-9002 Restriction Orifice No. 1124RO0201
STR	Steam Trap (Note 1& 3)	Unique number, commencing with the last two (2) digits of P&ID Example: P&ID: 1124-7-9002 Steam Trap No. 1124STR0201
Z	Safety Equipment inc. Hydrants, Hosereels, Monitors, Fire Extinguishers, Cabinets, BA Sets, Safety Showers (Note 1 & 3)	Unique number, commencing with last two- (2) digits of P&ID. Example: P&ID: 1124-7-9005 Safety Shower No. 1124Z0501

Note: 1. P&ID numbers are restricted to range 01 to 89. Available sequence number per P&ID for above equipment is 99. Thus total available range is 0101 to 8999. There is no P&ID 00 (see Note 3).

Dependent upon plant size, P&ID numbers for multi process train plants should be linked to the train number where possible. That is:

Common	P&ID range 9001 to 9009
Train 1	P&ID range 9010 to 9019
Train 2	P&ID range 9020 to 9029, etc.

2. Valve equipment numbers determined from the valve tag number.

To assist operational and maintenance personnel identify exact details for valve operation and replacement, a unique identification number, as per Section 4.1 - Valve Specifications for Process Isolations (ES-14-603-02) shall be assigned to all

valves shown on a P&ID including drain, vent and other minor isolation valves, except as follows.

The following valves, even if shown on a P&ID, are not required to be numbered:

- isolation valves for steam trap systems (these valves may be treated as part of the steam trap);
- instrument isolation valves (these valves may be treated as part of the instrument);

Small bore (DN25 or less) drain, vent and other minor isolation valves which are not shown on a P&ID and are used only during servicing and maintenance of equipment (e.g. hydrotest drain valves) are not required to be numbered.

Unique identification numbers shall be allocated to valves in the above categories when specifically requested, by the applicable Process or Maintenance Manager.

3. Prefix device number with 00 if there is no associated P&ID.
4. HRV classification covers both thermal expansion and hydrostatic pressure activation of valve.
5. RO is for any Restriction Orifice installed simply to restrict flow in a pipe and is not associated with any flow measurement process. If the orifice is associated with flow measurement, use code FE.

APPENDIX 4

MECHANICAL EQUIPMENT - SHEET 1 OF 2

EQUIPMENT TYPE CODE		SEQUENCE
CODE	DESCRIPTION REFER TO 5.1 AND APPENDIX 10 FOR VARIATIONS TO THIS STANDARD	NUMBER RANGE (NOTE 1 & 2)
A	Miscellaneous Equipment: Hydraulic Rams, Packing Equipment, Pneumatic Vibrating Devices, Silencers, Trailers, Turntables, Weighbridges, Knockers	_001 - _060
C	Crushers, Trommels	_061 - _100
D	Drying Equipment, Dehumidifiers	_101 - _120
F	Fired Equipment: Furnaces, Boilers, Heaters	_121 - _140
H	Heating, Ventilation and Air Conditioning (HVAC)	_141 - _160
J	Jets: Ejectors, Injectors	_161 - _180
K	Blowers, Compressors, Fans, Turbines	_181 - _220
L	Lifting Equipment: Lifts, OHT Cranes, Monorails, Jib Cranes, Hoists (see Note 4)	_221 - _260
M	Mixing Equipment: Agitators, Stirrers, Blenders, Kneaders, Static Mixers	_261 - _300
R	Reactors, Converters, Ion Exchange Units	_301 - _320
T	Unpressurised Tanks, Bins Hoppers, Pits, Ponds, Road Tankers, Sumps, Bunds, Isotainers	_321 - _380
Y	Ducts, Flues, Import/Export Hoses, Loading Arms, Piping (see Note 3), Stacks	_381 - _400
P	Pumps	_401 - _500
S	Separators: Cyclones, Dust Collectors, Classifiers, Filters, Screens, Sieves, Scrubbers	_501 - _600
V	Pressurised Vessels, Columns, Drums, Towers, Air Receivers, Isotainers, Pulsation Dampers, Accumulators	_601 - _700
E	Heat Transfer Equipment: Exchangers, Chillers, Superheaters, Vaporisers, Condensers, Cooling Towers	_701 - _820
X	Stationary Transport Equipment: Conveyors, Chutes, Elevators, Flowveyors, Screws, Rotary Feeders	_821 - _980
B	Buildings & Fixtures	_981 - _999

Note: 1: The first digit of the sequence number range indicates whether the equipment is used in a multi-process train situation or not. That is:

- 0--- Single-Train Process Plant eg Ammonia Plant, or when used as Common equipment in a Multi-Train Process Plant eg Storage Tank.
- 1--- Multi-Train Process Plant - Train 1 equipment
- 2--- Multi-Train Process Plant - Train 2 equipment

etc. through to

- 8--- Multi-Train Process Plant - Train 8 equipment

The 9--- series cannot be used for equipment numbering. It is restricted to mechanical/structural/civil/ tankage drawings not directly associated with a specific item of mechanical equipment.

Note: 2: Within any number range, the assigned number is unique within its equipment type and specific CSBP location and plant area, except where identical equipment with same duty is used in a process train situation. For example:

Single Train/Common		Multi Train	
1166P0401	Pump	1166P1401	Pump Waste Water Train 1
1166P0402	Pump	1166P2401	Pump Waste Water Train 2
1166P0403	etc	1166P1402A	Pump Feed Water Duty Train 1
		1166P1402B	Pump Feed Water Standby Train 1
		1166P2402A	Pump Feed Water Duty Train 2
		1166P2402B	Pump Feed Water Standby Train 2
		1166P1403	etc.

Note: 3: Generic equipment numbers for general plant piping groups shall be assigned sequence numbers commencing 0001 under Mechanical Equipment Code Y. Specific pipelines are numbered in accordance with CSBP Engineering Standard *Basis for Design - Piping (**ES-14-601-01**)*.

Note: 4: For a hoist and trolley that is 'permanently attached' to a specific monorail or jib crane beam one (1) equipment number shall be assigned to cover the beam, hoist and trolley.

Hoists and trolleys that are 'portable' i.e. they are not attached permanently to a specific monorail or jib crane beam, shall be assigned one (1) number for the hoist and trolley and one (1) number for the beam, specific to the plant area responsible for that equipment.

MECHANICAL EQUIPMENT - SHEET 2 OF 2

ASSOCIATED EQUIPMENT

Equipment number for motors, gearboxes and variable speed drives to be directly related to the associated mechanical piece of equipment.

e.g.	1124D0101	Drum
	1124MD0101	Motor Drum
	1124GD0101	Gearbox Drum
	1124VSDD0101	Variable Speed Drive Drum

NOTE: If alpha suffixes are used in conjunction with VSD's the parent mechanical equipment code shall not be specified.

e.g. 1124M0261

1124MM0261A	1124MM0261B
1124GM0261A	1124GM0261B
1124VSD0261A	1124VSD0261B

SEQUENCE NUMBER ALPHA SUFFIX

Mechanical equipment in duty/standby arrangement or where there are a number of identical units for a shared duty shall be identified by alpha suffix codes.

Codes to be allocated starting from the north or west perspective OR be consistent with existing plants in the operational area.

e.g.	1124P0401A	Pump Duty/North/West
	1124P0401B	Pump Standby/South/East

Multi train, duty/standby or shared duty equipment identified as per the following example:

1166P1407A	Pump Slurry Duty Train 1
1166P1407B	Pump Slurry Standby Train 1
1166P2407A	Pump Slurry Duty Train 2
1166P2407B	Pump Slurry Standby Train 2

Two identical units in a single drive line Parent Equipment Assembly identified as per following example:

1124X0821	Conveyor
1124MX0821	Motor Conveyor
1124GX0821X	Gearbox Primary
1124GX0821Y	Gearbox Secondary

EQUIPMENT NUMBER - DRAWING NUMBER RELATIONSHIP

Mechanical, Structural & Civil Drawings associated with a Mechanical item of equipment to be assigned a sequence number to match the equipment number as follows:

Equipment No. 1124D0101

Mechanical GA drawing	1124-4-0101/000
Associated Detail Drawings	1124-4-0101/001
	-0101/002 etc
Structural GA drawing	1124-3-0101/000
Associated Detail Drawings	1124-3-0101/001
	-0101/002 etc
Civil GA drawing	1124-2-0101/000
Associated Detail Drawings	1124-2-0101/001
	-0101/002 etc

Electric Schematics and Termination diagrams to be associated to the mechanical equipment as follows :

Drawing Type

Drum	1124D0101
Motor Drum	1124MD0101
Electrical Schematic	1124-9-1101
Termination Diagram	1124-9-2101

Sequence No.

Train number and duty/stand by arrangements are identified through the sheet numbers.

Train No.

Example :

Drawing type

Train No.

Pump	1166P1407A
Motor Pump	1166MP1407A
Electrical Schematic	1166-9-1407 / 101
Termination Diagram	1166-9-2407 / 101
Pump	1166P1407B
Motor Pump	1166MP1407B
Electrical Schematic	1166-9-1407/102
Termination Diagram	1166-9-2407/102
Pump	1166P2407A
Motor Pump	1166MP2407A
Electrical Schematic	1166-9-1407/201
Termination Diagram	1166-9-2407/201 etc.

Refer to CSBP Engineering Standard *Drawing Numbering* (*ES-14-101-04*) for details.

APPENDIX 5

ELECTRICAL EQUIPMENT - SHEET 1 OF 3

'ELECTRICAL ONLY' EQUIPMENT NOT SUPPLIED FROM A MAIN SWITCHBOARD

EQUIPMENT TYPE CODE
Refer to 5.1 and Appendix 10 for variations to this standard.

CODE	DESCRIPTION	SEQUENCE NO RANGE
AP	Annunciator Panel	_001 - _010
	Future Use	_011 - _030
CPU	Central Processing Unit	_031 - _050
EA	Electrical Miscellaneous Equipment - Ultra Violet Steriliser etc.	_051 - _080
EBB	Battery Bank	_081 - _090
EBC	Electrical Battery Charger	_091 - _100
EBI	Electrical Battery Inverter	_101 - _110
EBR	Battery Room	_111 - _120
EDMP	Electrical Distribution To Moving Plant - crane power rails, catenary cable systems, trailing cable systems etc	_121 - _140
ERB	Resistor Bank	_141 - _160
	Future Use	_161 - _180
JB	Junction Box	_181 - _220
	Future Use	_221 - _230
OC	Operators Console, including a VDU	_231 - _240
PLC	Programmable Logic Controller	_241 - _260
PS	Power Supply	_261 - _270
SRN	Siren - Emergency	_271 - _280
	Future Use	_281 - _380
	Future Use	_401 - _600
	Future Use	_821 - _999

'ELECTRICAL ONLY' EQUIPMENT WHICH MAYBE SUPPLIED FROM A MAIN SWITCHBOARD

EQUIPMENT TYPE CODE
Refer to 5.1 and Appendix 10 for variations to this standard.

CODE	DESCRIPTION	SEQUENCE NO RANGE
CP	Control Panel	_381 - _400
SB	Switchboard, MCC	_601 - _610
DB	Distribution Board	_611 - _640
EH*	Electrical Heater	_641 - _660
MAG	Magnet	_661 - _670
UPS	Uninterruptible Power Supply	_671 - _680
GAC	AC Generator	_681 - _690
GDC	DC Generator	_691 - _700
ATS	Automatic Transfer Switch	_701 - _710
TX	Transformer (Not High Voltage)	_711 - _720
	Future Use	_721 - _820

* Electrical heater can also be classified as a component of a parent unit of equipment e.g. Electrical heater in a tank.

The first digit of the sequence number range indicates whether the equipment is used in a process train situation. Refer to Appendix 4 for examples.

EQUIPMENT NO. – DRG NO. RELATIONSHIP

Electric Schematics and Termination drawings to be as follows:

Drawing Type

Annunciator 1124AP0005
Electrical Schematic 1124-9-5005
Termination Diagram 1124-9-6005

Sequence No.

Refer also to Appendix 4 – Equipment/Drawing No. Relationship for examples of Multi Process Train numbering.

Refer to CSBP Engineering Standard *Drawing Numbering* (*ES-14-101-04*) for details of drawing type prefixes.

FIELD CONTROL DEVICE COMPONENTS

Equipment numbers are not required for field control device components associated with electric motor controls.

Refer to CSBP Engineering Standard *Materials & Workmanship For Electrical Installations* (*ES-14-902-01*) 'Cable Marking & Ferruling' for details.

ELECTRICAL EQUIPMENT - SHEET 2 OF 3

ELECTRICAL EQUIPMENT THAT DOES NOT HAVE AN ASSOCIATED CSBP SCHEMATIC OR TERMINATION DIAGRAM		
EQUIPMENT TYPE CODE		COMMENTS
CODE	DESCRIPTION	
VSD	Variable Speed Drive	Numbered according to the equipment they drive. e.g. 1124P0401 Pump 1124MP0401 Motor 1124VSD0401 Variable Speed Drive In the case of duty and standby drives the parent mechanical equipment code shall not be specified due to twelve (12) character system limitation. e.g. 1124P0402A 1124MP0402A 1124VSD0402A Refer also to appendix 4 - Associated Equipment
Q	Circuit Breakers, Isolator, Switch, CFS Unit, OCB	LV switches do not have their own equipment number. Each switch is part of other equipment. e.g. 1125-SB-0001 is a switchboard with various Isolators, Switches or Breakers on it.

ELECTRICAL EQUIPMENT - SHEET 3 OF 3

HIGH VOLTAGE EQUIPMENT AND COMMON SERVICES		
EQUIPMENT TYPE CODE		COMMENTS
CODE	DESCRIPTION	
Q SUB SWYD TX	Circuit Breakers, Isolator, Switch, CFS Unit, OCB Substation Switchyard Transformer	HV equipment has a specific equipment number and associated drawing number series. Refer to summary list below and CSBP Engineering Standard *Drawing Numbering (ES-14-101-04)* for full details.

KWINANA - PLANT GENERAL SEQUENCE NUMBER		
DESCRIPTION	EQUIP NO. 1100XXXXXX	DRAWING 1100-9-_XXX/_ _ _
Main 22 kV Substation No. 9 - Switchboard No. 9 - Breaker	SUB0009 SB0009 Q0900 TO Q0919	 000 to 019
132 kV Switchyard		020 to 029
High Voltage Transformers	TX0001 TO TX0099	030/010 to 030/019 030/990 to 030/999
Main Incoming Substation - Miscellaneous - 22kV SB No. 9 - 132 kV SWYD	SB0009	 090 & 091 092 & 093
6 kV Substation No. 1 - Switchboard No. 1 - Breaker	SUB0001 SB0001 Q0100 TO Q0109	 100 to 109
6 kV Substation No. 2 - Switchboard No. 2 - Breaker	SUB0002 SB0002 Q0200 TO Q0219	 110 to 129
Substation No. 1 & 2 - Miscellaneous - SB No. 1 - SUB No. 1 - SB No. 2 - SUB No. 2	SUB 0001 & SUB 0002 SB0001 SUB0001 SB0002 SUB0002	 190 191 192 193
Other Common Services Except High Voltage - Works Sirens - Bore Pumps - Chemical North Services - Telephone Systems - Miscellaneous Services - Common Services And Future Use	 1100SRN0001 TO 0099	 200 201 202 203 204 205 to 299
22 kV Substation No. 3 - Switchboard No. 3 - Breaker - Switchboard No. 4 - Breaker - Miscellaneous - SB No. 3 & 4 - SUB No. 3	SUB0003 SB0003 Q0300 TO Q0319 SB0004 Q0400 TO Q0419 SB0003 & SB0004 SUB0003	 300 to 319 320 to 339 390 391
3.3 kV Substation No. 11 - Switchboard No. 11 - Breaker - Miscellaneous - SB No. 11 - SUB No. 11	SUB0011 SB0011 Q1100 TO Q1139 SB0011 SUB0011	 400 to 439 490 491
22 & 6.6 kV Substation No. 5 - Switchboard No. 5 - Breaker - Switchboard No. 6 - Breaker - Miscellaneous - SB No. 5 - SUB No. 5 - SB No. 6	SUB0005 SB0005 Q0500 TO Q0519 SB0006 Q0600 TO Q0619 SB0005 SUB0005 SB0006	 500 to 519 520 to 539 590 591 592
6.6 kV Substation No. 7 - Switchboard No. 7 - Breaker - Miscellaneous - SB No. 7 - SUB No. 7	SUB0007 SB0007 Q0700 TO Q0730 SB0007 SUB0007	 700 to 730 790 791
Future HV Substation		8xx
22 kV Substation No. 10 - Switchboard No. 10 - Breaker - Miscellaneous - SB No. 10 - SUB No. 10	SUB0010 SB0010 Q1000 TO Q1019 SB0010 SUB0010	 900 to 919 990 991

APPENDIX 6 - INSTRUMENT EQUIPMENT

EQUIPMENT TYPE CODE		SEQUENCE NUMBER	
CODE	**DESCRIPTION**	**RANGE**	**COMMENT**
BMS	Burner Management System	_001 - _999	
CFDI	Communication Fieldbus Digital Interface	_001 - _999	The first digit of the sequence number range indicates whether the equipment is used in a process train situation. Refer to Appendix 4 for examples.
CFPC	Communication Fieldbus Power Conditioner	_001 - _999	
CFSI	Communication Fieldbus Segment Interface	_001 - _999	
CFTM	Communication Fieldbus Temperature Multiplexor	_001 - _999	
CFVC	Communication Fieldbus Valve Coupler	_001 - _999	
DCS	Distributed Control System	_001 - _999	
ESD	Emergency Shutdown System	_001 - _999	
ICP	Instrument Control Panel	_001 - _999	
IDB	Instrumentation Distribution Panel	_001 - _999	
IJB	Instrument Junction Box	_001 - _999	
IMP	Instrument Marshalling Panel	_001 - _999	
ISP	Instrument System Printers	_001 - _999	

EQUIPMENT TYPE CODE		SEQUENCE NUMBER	ASSOCIATED DRAWING
CODE	**DESCRIPTION**		
I	Loops	Unique number, commencing with the last two- (2) digits of associated P&ID. e.g. P&ID 1124-7-9002 LOOP 1124I0201 1124I0202 etc P&ID numbers are restricted to range 01 to 89. Available sequence numbers per P&ID is 99. Thus total available range is 0101 to 8999. There is no P&ID 00. Dependent upon plant size, P&ID numbers for multi-process train plants should be linked to the train number where possible. That is: Common P&ID range 9001 to 9009 Train 1 P&ID range 9010 to 9019 Train 2 P&ID range 9020 to 9029 etc.	Instrument loop drawing number to match the loop number. e.g. Loop 1124I0201 Loop Drg No. 1124-7-0201 Refer To CSBP Engineering Standard *Drawing Numbering* (*ES-14-101-04*) For Details.

LOOP ELEMENT (REFER TO APPENDIX 8 FOR FULL LISTING)

The tag number of each element in a loop is to match the Loop Number. Elements are distinguished from each other by the equipment type code.

Example: Loop 1124I 0201 Instrument Tag Numbers 1124PV 0201
1124PIT 0201
1124PIC 0201
Equip code refer Appendix 8

Note: Short form of TAG NUMBER = PV0201, LOOP NUMBER = 0201

SEQUENCE NUMBER ALPHA SUFFIX

Major instrument equipment in duty/standby arrangement to be distinguished from each other with alpha suffix codes.	Can be used for final control elements where a loop has more than one final control element (e.g. split range control valves). Use of alpha suffix does not constitute a new loop number. e.g. TT0101A & TT0101B are part of Loop 0101 and would have the same sequence number for associated drawings.

APPENDIX 7 - COMMUNICATION, FIRE PROTECTION SECURITY SYSTEM & TEST / CALIBRATION EQUIPMENT

EQUIPMENT TYPE CODE		SEQUENCE NUMBER RANGE
CODE	**DESCRIPTION**	
CU	Personnel Communication Units, Telephones, Public Address, Portable Radios and Base Stations etc.	_001 - _999
FPP	Fire Protection Panel	_001 - _999
SS	Security System	_001 - _999
TEQ	Workshop Test Equipment used for Plant & Equipment certification	_001 – _999
VM	Video Monitoring which covers Closed Circuit Television and IP Camera Monitoring Systems Suffixes shall be used to describe the types of equipment as follows: • C Camera • M Monitor • S Server • R Recorder Examples: 1141VMS0001 is #3 D&D Video Server 1141VMC0001A is #3 D&D Camera A 1141VMC0001B is #3 D&D Camera B 1141VMM0001A is #3 D&D Monitor A 1141VMM0001B is #3 D&D Monitor B 1141VMR001A is #3 D&D Recorder A 1141VMR0001B is #3 D&D Recorder B	_001 – _999

Note: Each item of equipment must have an individual sequence number except where an alpha suffix is used.

The first digit of the sequence number range indicates whether the equipment is used in a process train situation. Refer to Appendix 4 for examples.

Equipment numbers are not required for security system, field control device components. Refer to CSBP Engineering Standard *Materials and Workmanship for Electrical Installations (ES-14-902-01)* 'Cable Marking and Ferruling' for requirements.

APPENDIX 8 - ISA EQUIPMENT CODES

FIRST LETTERS			SUCCEEDING LETTERS		
	Measured or Initiating Variable	**Modifier**	**Readout or Passive Function**	**Output Function**	**Modifier**
A	Analysis		Alarm		
B	Burner Combustion				
C				Control	
D	Density	Differential			
E	Voltage		Sensor, Primary Element		
F	Flow Rate				
G			Glass, Viewing Device		
H	Hand				High
I	Current (Electrical)		Indicate		
J	Power	Scan			
K	Time	Time Rate of Change		Control Station	
L	Level		Light		Low
M		Momentary			Mid Point
N					
O			Orifice, Restriction		
P	Pressure, Vacuum		Test Point Connection		
Q	Quantity		Integrate, Totalise		
R	Radiation	Ratio	Record		
S	Speed, Frequency	Safety		Switch, signal	
T	Temperature			Transmit	
U	Multivariable		Multifunctional	Multifunctional	Multifunctional
V	Vibration			Valve, Damper, Louver	
W	Weight, Force		Well		
X		X Axis			
Y	Event, State Presence	Y Axis	Alarm	Relay, Compute. Convert	
Z	Position, Dimension	Z Axis		Driver, Actuator, Unclassified Element	

ISA EQUIPMENT CODES – PREFIX 'A' AND 'B'

PREFIX	DESCRIPTION
AAH	Analyser Alarm High
AAHL	Analyser Alarm High/Low
AAL	Analyser Alarm Low
AC	Analyser Controller (Blind, Indication Inaccessible to Operator)
ACV	Analyser Control Valve (Self-Regulating, Self-Actuated)
AE	Analyser Element
AI	Analyser Indicator
AIC	Analyser Indicating Controller
AIT	Analyser Indicating Transmitter
AP	Analyser Test Point
AR	Analyser Recorder
ASH	Analyser Switch High
ASHL	Analyser Switch High/Low
ASL	Analyser Switch Low
AT	Analyser Transmitter
AV	Analyser Control Valve (Final Control Element)
AY	Analyser Transducer/Signal Converter/Solenoid Valve
AZ	Analyser Unclassified Element
BAH	Burner Alarm High
BAL	Burner Alarm Low
BAHL	Burner Alarm High/Low
BC	Burner Controller (Blind, Indication Inaccessible to Operator)
BE	Burner Element
BG	Burner Viewing Device
BI	Burner Indicator
BIC	Burner Indicating Controller
BIT	Burner Indicating Transmitter
BSH	Burner Switch High
BSL	Burner Switch Low
BT	Burner Transmitter
BSHL	Burner Switch High/Low
BV	Burner Control Valve (Final Control Element)
BY	Burner Transducer/Signal Converter
BZ	Burner Unclassified Element

ISA EQUIPMENT CODES – PREFIX 'D' AND 'E'

PREFIX	DESCRIPTION
DAH	Density Alarm High
DAL	Density Alarm Low
DAHL	Density Alarm High/Low
DC	Density Controller (Blind, Indication Inaccessible to Operator)
DIC	Density Indicating Controller
DE	Density Element
DI	Density Indicator
DIT	Density Indicating Transmitter
DR	Density Recorder
DSH	Density Switch High
DSL	Density Switch Low
DSHL	Density Switch High/Low
DT	Density Transmitter
DV	Density Control Valve (Final Control Element)
DY	Density Transducer/Signal Converter
DZ	Density Unclassified Element

EAH	Voltage Alarm High
EAL	Voltage Alarm Low
EAHL	Voltage Alarm High/Low
EC	Voltage Controller (Blind, Indication Inaccessible to Operator)
EI	Voltage Indicator
EIC	Voltage Indicating Controller
EIT	Voltage Indicating Transmitter
ER	Voltage Recorder
ESH	Voltage Switch High
ESL	Voltage Switch Low
ESHL	Voltage Switch High/Low
ET	Voltage Transmitter
EY	Voltage Transducer/Signal Converter
EZ	Voltage Unclassified Element

ISA EQUIPMENT CODES – PREFIX 'F'

PREFIX	DESCRIPTION
FAH	Flow Alarm High
FAL	Flow Alarm Low
FAHL	Flow Alarm High/Low
FC	Flow Controller (Blind, Indication Inaccessible to Operator)
FCV	Flow Control Valve (Self-Regulating, Self-Actuated)
FE	Flow Element (Use for all in line flow elements providing flow indication. Use RO for flow restriction not connected to any flow indicating device)
FFAH	Flow Ratio Alarm High
FFAL	Flow Ratio Alarm Low
FFC	Flow Ratio Controller (Blind, Indication Inaccessible to Operator)
FFCV	Flow Ratio Control Valve (Self-Regulating, Self-Actuated)
FFI	Flow Ratio Indicator
FFIC	Flow Ratio Indicating Controller
FFR	Flow Ratio Recorder
FFSH	Flow Ratio Switch High
FFSL	Flow Ratio Switch Low
FFV	Flow Ratio Control Valve (Final Control Element)
FFY	Flow Ratio Transducer/Signal Converter
FFZ	Flow Ratio Unclassified Element
FG	Flow Viewing Device
FI	Flow Indicator
FIC	Flow Indicating Controller
FIT	Flow Indicating Transmitter
FO	Flow Orifice (Don't use. Use FE for flow measuring orifice plates. Use RO per Appendix 3 for Flow Restricting Orifice not connected to an instrument)
FP	Flow Test Point
FQAH	Flow Totaliser Alarm High
FQE	Flow Totaliser Element
FQI	Flow Totaliser Indicator
FQIT	Flow Totaliser Indicating Transmitter
FQR	Flow Totaliser Recorder
FQSH	Flow Totaliser Switch High
FQT	Flow Totaliser Transmitter
FQY	Flow Totaliser Transducer/Computing Device
FQZ	Flow Totaliser Unclassified Element
FR	Flow Recorder
FSH	Flow Switch High
FSL	Flow Switch Low
FSHL	Flow Switch High/Low
FT	Flow Transmitter
FV	Flow Control Valve (Final Control Element)
FY	Flow Transducer/Signal Converter/Solenoid Valve
FZ	Flow Unclassified Element

ISA EQUIPMENT CODES – PREFIX 'H', 'I' AND 'J'

PREFIX	DESCRIPTION
HA	Hand Alarm
HC	Hand Controller (Blind, Indication Inaccessible to Operator)
HIC	Hand Indicating Controller
HS	Hand Switch
HV	Hand Control Valve
HZ	Hand Unclassified Element
IAH	Current Alarm High
IAHL	Current Alarm High/Low
IAL	Current Alarm Low
IC	Current Controller (Blind, Indication Inaccessible to Operator)
IE	Current Element
II	Current Indicator
IIC	Current Indicating Controller
IIT	Current Indicating Transmitter
IR	Current Recorder
IRT	Current Recording Transmitter
ISH	Current Switch High
ISHL	Current Switch High/Low
ISL	Current Switch Low
IT	Current Transmitter
IY	Current Transducer/Signal Converter
IZ	Current Unclassified Element
JAH	Power Alarm High
JAL	Power Alarm Low
JAHL	Power Alarm High/Low
JC	Power Controller (Blind, Indication Inaccessible to Operator)
JE	Power Element
JI	Power Indicator
JIC	Power Indicating Controller
JIT	Power Indicating Transmitter
JR	Power Recorder
JSH	Power Switch High
JSL	Power Switch Low
JSHL	Power Switch High/Low
JT	Power Transmitter
JY	Power Transducer/Signal Device
JZ	Power Unclassified Element

ISA EQUIPMENT CODES – PREFIX 'L', 'P' AND 'S'

PREFIX	DESCRIPTION
LAH	Level Alarm High
LAL	Level Alarm Low
LAHL	Level Alarm High/Low
LC	Level Controller (Blind, Indication Inaccessible to Operator)
LCV	Level Control Valve (Self-Regulating, Self-Actuated)
LE	Level Element
LG	Level Viewing Device
LI	Level Indicator
LIC	Level Indicating Controller
LIT	Level Indicating Transmitter
LR	Level Recorder
LSH	Level Switch High
LSL	Level Switch Low
LSHL	Level Switch High/Low
LT	Level Transmitter
LV	Level Control Valve (Final Control Element)
LY	Level Transducer/Signal Converter/Solenoid Valve
LZ	Level Unclassified Element
PAH	Pressure Alarm High
PAL	Pressure Alarm Low
PAHL	Pressure Alarm High/Low
PC	Pressure Controller (Blind, Indication Inaccessible to Operator)
PCV	Pressure Control Valve (Self-Regulating, Self-Actuated)
PE	Pressure Element
PG	Pressure Gauge
PI	Pressure Indicator
PIC	Pressure Indicating Controller
PIT	Pressure Indicating Transmitter
PP	Pressure Test Point
PR	Pressure Recorder
PSE	Pressure Safety Element
PSH	Pressure Switch High
PSL	Pressure Switch Low
PSHL	Pressure Switch High/Low
PT	Pressure Transmitter
PV	Pressure Control Valve (Final Control Element)
PY	Pressure Transducer/Signal Converter/Solenoid Valve
PZ	Pressure Unclassified Element

Note: Include Vacuum Devices in this Category

ISA EQUIPMENT CODES – PREFIX 'L', 'P' AND 'S'

PREFIX	DESCRIPTION
PDAH	Pressure Differential Alarm High
PDAL	Pressure Differential Alarm Low
PDC	Pressure Differential Controller (Blind, Indication Inaccessible to Operator)
PDCV	Pressure Differential Control Valve (Self-Regulating, Self-Actuated)
PDE	Pressure Differential Element
PDI	Pressure Differential Indicator
PDIC	Pressure Differential Indicating Controller
PDR	Pressure Differential Recorder
PDSH	Pressure Differential Switch High
PDSL	Pressure Differential Switch Low
PDT	Pressure Differential Transmitter
PDIT	Pressure Differential Indicating Transmitter
PDV	Pressure Differential Control Valve (Final Control Element)
PDY	Pressure Differential Transducer/Computing Device
PDZ	Pressure Differential Unclassified Element
RO	Restriction Orifice. (Refer Appendix 3. Use for flow restriction only. Use FE for flow measurement.)
SAH	Speed Alarm High
SAL	Speed Alarm Low
SAHL	Speed Alarm High/Low
SC	Speed Controller (Blind, Indication Inaccessible to Operator)
SE	Speed Element
SI	Speed Indicator
SIC	Speed Indicating Controller
SIT	Speed Indicating Transmitter
SR	Speed Recorder
SSH	Speed Switch High
SSHL	Speed Switch High/Low
SSL	Speed Switch Low
ST	Speed Transmitter
SY	Speed Transducer/Signal Device
SZ	Speed Unclassified Element

ISA EQUIPMENT CODES – PREFIX 'T' AND 'U'

PREFIX	DESCRIPTION
TAH	Temperature Alarm High
TAL	Temperature Alarm Low
TAHL	Temperature Alarm High/Low
TC	Temperature Controller (Blind, Indication Inaccessible to Operator)
TCV	Temperature Control Valve (Self-Regulating, Self Actuated)
TDAH	Temperature Differential Alarm High
TDAL	Temperature Differential Alarm Low
TDC	Temperature Differential Controller (Blind, Indication Inaccessible to Operator)
TDCV	Temperature Differential Control Valve (Self-Regulating, Self Actuated)
TDI	Temperature Differential Indicator
TDIC	Temperature Differential Indicating Controller
TDR	Temperature Differential Recorder
TDSH	Temperature Differential Switch High
TDSL	Temperature Differential Switch Low
TDV	Temperature Differential Control Valve (Final Control Element)
TDY	Temperature Differential Transducer/Computing Device
TDZ	Temperature Differential Unclassified Element
TE	Temperature Element
TI	Temperature Indicator
TIC	Temperature Indicating Controller
TIT	Temperature Indicating Transmitter
TP	Temperature Test Point
TR	Temperature Recorder
TSH	Temperature Switch High
TSHL	Temperature Switch High/Low
TSL	Temperature Switch Low
TT	Temperature Transmitter
TV	Temperature Control Valve (Final Control Element)
TW	Temperature Well
TY	Temperature Transducer/Signal Converter/Solenoid Valve
TZ	Temperature Unclassified Element

UA	Multivariable Alarm
US	Multivariable Switch
USH	Multivariable Switch High
USL	Multivariable Switch Low

ISA EQUIPMENT CODES – PREFIX 'V', 'W', 'X' AND 'Y'

PREFIX	DESCRIPTION
VAH	Vibration Alarm High
VAHL	Vibration Alarm High/Low
VAL	Vibration Alarm Low
VE	Vibration Element
VI	Vibration Indicator
VIT	Vibration Indicating Transmitter
VR	Vibration Recorder
VSH	Vibration Switch High
VSL	Vibration Switch Low
VSHL	Vibration Switch High/Low
VT	Vibration Transmitter
VY	Vibration Transducer/Computing Device
VZ	Vibration Unclassified Element
WAH	Weight Alarm High
WAHL	Weight Alarm High/Low
WAL	Weight Alarm Low
WC	Weight Controller (Blind, Indication Inaccessible to Operator)
WE	Weight Element
WI	Weight Indicator
WIC	Weight Indicating Controller
WIT	Weight Indicating Transmitter
WR	Weight Recorder
WSH	Weight Switch High
WSHL	Weight Switch High/Low
WSL	Weight Switch Low
WT	Weight Transmitter
WV	Weight Valve
WY	Weight Transducer/Computing Device
WZ	Weight Final Element
WZ	Weight Unclassified Element
XS	Miscellaneous Signal
XV	Actuated Valve
XY	Actuated Valve Solenoid
YA	Event Alarm (StartUp Warning)

ISA EQUIPMENT CODES – PREFIX 'Z'

PREFIX	DESCRIPTION
ZAH	Position Alarm High
ZAHL	Position Alarm High/Low
ZAL	Position Alarm Low
ZC	Position Controller (Blind, Indication Inaccessible to Operator)
ZE	Position Element
ZI	Position Indicator
ZIC	Position Indicating Controller
ZIT	Position Indicating Transmitter
ZR	Position Recorder
ZS	Position Switch
ZSH	Position Switch High
ZSHL	Position Switch High/Low
ZSL	Position Switch Low
ZT	Position Transmitter
ZV	Actuated Valve
ZY	Position Transducer/ Computing Device
ZZ	Position Unclassified Element

APPENDIX 9 - PHILOSOPHY BEHIND THE EQUIPMENT NUMBERING SYSTEM: FOR PLANTS DESIGNED POST MAY 1998

This Equipment Numbering System was developed so that there would be a direct and identifiable link between equipment and associated drawings. This was seen as an important strategic step towards meeting a company wide, coordinated and integrated approach to engineering activities at CSBP.

Linking of drawings with equipment is an integral part of Facilities Information Management and will assist in providing easily accessible drawings necessary to:

- facilitate safe, reliable and cost effective operation of the plant;
- minimise risk of accidents and unplanned equipment outages;
- minimise shut down time;
- assist in the training of operators and maintenance personnel;
- assist in the design of future plant changes through the provision of a reliable source of information;
- ensure the company's safety and operating reliability objectives are met;
- ensure plant can be maintained fit for its intended purpose;
- assist in maintaining the integrity of maintenance and drawing records.

Importantly, the equipment numbers are generally in accordance with existing standards. None of the changes require the drawing office database to be modified or affect the drawing office drawing management software or require changes to the Asset Management system (JDE).

Basis of the system is as follows:

a. Mechanical equipment numbers are unique and restricted to the range 001 to 999. They are prefixed with a numeric to indicate whether the equipment is used in a multi-process train situation or not. ('0' – Single-Train Process Plant eg Ammonia Plant, or when used as Common equipment in a Multi-Train Process Plant eg Storage Tank, '1' – Multi-Train Process Plant - Train 1 equipment, '2' - Train 2 equipment, etc. through to '8' - Train 8). Upper limit of 8 trains is because the 9--- series is restricted to mechanical/structural/civil and tankage drawings not directly associated with a specific item of mechanical equipment. It is not expected that any foreseeable plant would need more than 350 items of mechanical equipment. Should there be an extraordinarily large single train plant then the mechanical equipment could be split into equipment which requires an electrical supply (these would be in the range 0001 to 0999) and equipment which does not require an electrical supply (these would be in the range 1001 to 1999). Split for a multi process train would be determined on a case by case basis. If such a division

occurred then it would be documented as an appendix in this standard as the equipment numbering system specific for that plant.

b. Where the mechanical equipment is supplied by an electrical feeder or driven by an electrical device it is considered to be 'electrically driven/supplied mechanical' equipment. This allows the associated electrical schematics and termination diagrams to use the mechanical equipment number as the last three digits. Thus schematics will be XXXX-9-1YYY/ZZZ and termination diagrams XXXX-9-2YYY/ZZZ, where YYY is the mechanical equipment number. If the plant is process train orientated assigned sheet numbers will be aligned to the train number (0ZZ - Single Train/Common, 1ZZ - Train 1, 2ZZ - Train 2, etc). Similarly, duty/standby arrangements will be identified through the sheet number series. This numbering represents no change from the existing drawing numbering standard. An engineer or electrician in the field will know which schematic or termination diagram series to look at by just knowing the mechanical equipment number. The drawing will be able to be identified without having to interrogate JDE or search through the drawing catalogue. This will speed up response to problem solving in the plant.

c. Similarly, the mechanical (-4-), civil (-2-) and structural (-3-) drawings will also be aligned with the mechanical equipment number.

d. Additionally the ferrule numbers on the wiring is prefixed with the equipment number. The last 3 digits of the equipment number will align directly with the drawing number. This means the drawing number, cable number and ferrule number all align and there will be no duplication of ferrules in the field.

e. Mechanical equipment numbers are issued according to number 'bands'. The banding has been allocated on the basis that it fits all existing plants at Kwinana. It is expected that the band plan will be able to be applied directly for future plants. In the event that the band plan does not suit a particular new plant then the bands can be adjusted to suit. When this occurs the band plan for that plant will be added to this standard as an appendix.

f. Issuing equipment numbers in bands allows Reliability Support Group to allocate the next equipment number with confidence, since it will be the next number in sequence (JDE sorts equipment numbers in alphanumeric sequence, based on a 'number' comprising the equipment code and the equipment number). To allow equipment numbers to be issued without reference to the Standard, Reliability Support Group will enter a dummy equipment number in the AS400 maintenance database for each 'band'. For example: T0000 or P0000. The description would identify the range allocated for that particular plant. Thus it will be clear what the start and finish number is for each piece of equipment without having to refer to the engineering equipment numbering standard. In the case of a plant area containing sub-areas e.g. if a despatch area has a number of despatch points then it may be logical to sub divide the equipment within the bands i.e. 'banding within banding'. This would be at the discretion of the designers and Reliability Support Group. If a division occurred then it will be documented as an appendix in this standard as the 'equipment numbering system' specific for that plant.

g. Banding within banding meets Reliability Support Group's needs, regards issuing of numbers and also allows electrical and mechanical drawings to be matched to the equipment. Issuing numbers in areas (e.g. 1000 series for plant area A and 2000

series for plant area B) was not favoured because it could be confused with "Train" numbering. Also it would be quite a difficult process to extract the numbers from JDE and check them for the highest issued number in a particular area, before issuing the next number. This process is also subject to human error.

h. Electrical equipment type codes are split into two main sections. The first section covers equipment that may require an electrical schematic or termination diagram to be generated. The second section includes all other electrical equipment. The first section is split into 'bands'. There are spare numbers to allow for future equipment types.

i. To allow for 'electrical only' equipment (i.e. electrical equipment that is not considered to be an integral part of some mechanical equipment, for which a mechanical equipment number would be issued) and 'electrically driven/supplied mechanical equipment' to have the same number but with different drawings:

   (a) 'Electrical only' schematics will be in the XXXX-9-5AAA series and termination diagrams in the XXXX-9-6AAA series of drawings. This has required the existing location/GA/Layout electrical drawing fields to be amalgamated and assigned the XXXX-9-9AAA drawing field. This change is readily adopted.

j. Special precautions were required to ensure that 'electrical only' and 'electrically driven/supplied mechanical equipment', which may be supplied from the same MCC do not have the same four numeric descriptors. This was achieved by ensuring that any 'electrical only' equipment that may be supplied direct from an MCC was allocated within a band of the mechanical equipment numbering that doesn't require an electrical supply. This will minimise confusion when isolating equipment at the MCC.

k. The issuing of equipment numbers for electrical equipment will be straight forward in a similar manner as per the issue of mechanical equipment numbers.

l. When searching for an electrical drawing. Consideration will need to be given to whether it is 'electrical only' or is it 'electrically driven/supplied mechanical equipment'. This should not be a major hurdle.

m. To assist with locating valves, instrumentation, pipelines and safety equipment on P&ID's, this equipment will assume the last two digits of the P&ID number for its first two digits. This restricts the range of numbers from 0101 to 8999 ie 99 items of equipment per P&ID. The lower limit is due to the first P&ID being 01 (and not 00), and the upper limit is due to the existing allocation of numbers in the instrument drawing system for drawings 9001 to 9799. Items not appearing on any P&ID will be prefixed with '00'.

n. P & ID numbers for multi process train plants should be linked to the train number (Single Train/Common P & ID range being 9001 to 9009, Train 1 - 9010 to 9019, Train 2 - 9020 to 9029, etc). Due to the limit in range of 10 P & IDs per Train, this may not be possible in an extraordinarily large plant.

APPENDIX 10 - VARIATIONS TO STANDARD

Approved variations to this Standard for Equipment Type Codes and/or sequence number centre ranges for Plants designed post May 1998.

LOCATION CODE	PLANT AREA CODE	EQUIPMENT TYPE CODE	EQUIPMENT TYPE DESCRIPTION	SEQUENCE NUMBER RANGE	ASSOCIATED APPENDIX

Variations to this standard, are only permitted with written consent by the Engineering Manager after consultation with the Reliability Support Group and CSBP Project Engineering Document Control